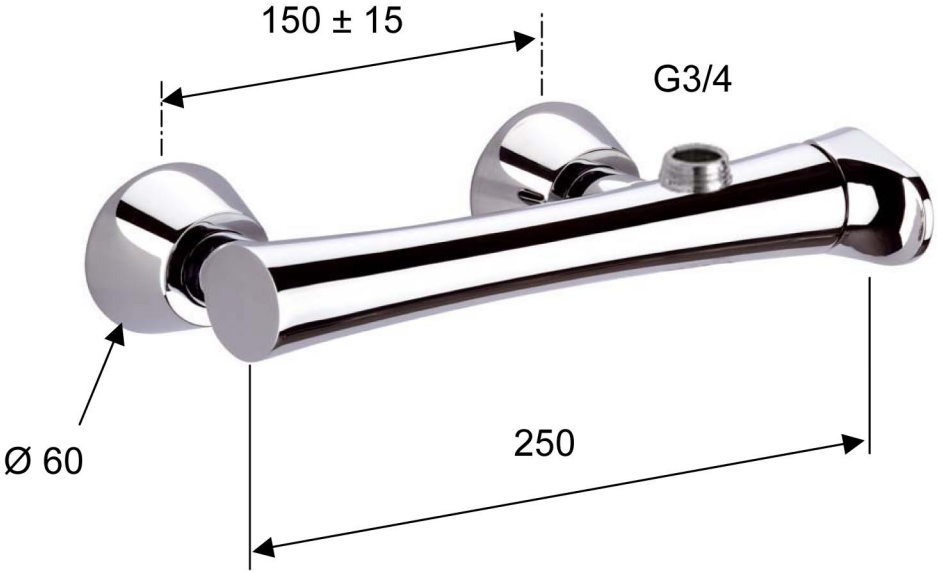

AX12